WALL DUCT
IN STEEL AND PLASTIC

The Wall Duct are made of seamless or welded steelpipe - St. 37.
Standard design are painted to ensure the best attachment to concrete under ground.
Supplied with anchor flange - fully welded from 1 side - to ensure fasten plus ensureing a great waterstop.
Are manufactured according to danish gas regulations part B-4 and approved by DGP under no. TV 65.

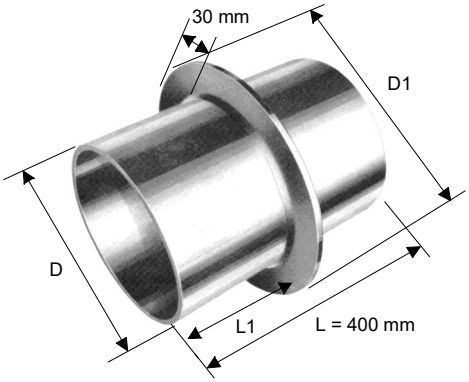

Gas pipe DN	Wall Duct D x L	L1	D1 min.	Insulator type	Casing end Seal type	Item no.
1”	88,9 x 500	200	150	PA 1 - 13	KG 1” - 3”	211-2450
1 1/4”	88,9 x 500	200	150	PA 1,25 - 11	KG 1 1/2” - 3”	211-2451
1 1/2”	114,3 x 500	200	175	PA 1,5 - 14,5	DU 1 1/2” - 4”	211-2452
2”	114,3 x 500	200	175	PA 2 - 16	DU 2” - 4”	211-2453
2 1/2”	168,3 x 500	200	230	RANGER II S - 28 (4 seg)	KG 2 1/2”´- 6”	211-2454
3”	168,3 x 500	200	230	PA 3 - 24	DU 3” - 6”	211-2455
4”	168,3 x 500	200	230	PA 4 - 16	KG 4” - 6”	211-2456
6”	222,0 x 500	200	285	PA 6 - 16	DU 6” - 8”	211-2457
8”	323,0 x 500	200	385	AZ 2-25 (3 seg)	KG 8” - 12”	211-2458
10”	355,0 x 500	200	415	PA 10 - 25	KG 10” - 14”	211-2459
12”	406,0 x 500	200	470	AZ 1+AZ 2 - 25 (1+4 seg)	KG 12” - 16”	211-2460

The Wall Duct are made of PE100 SDR17 plastic pipe.
Standard design are partly covered with sand to ensure the best attachment to concrete - or other concreting over ground.
Are manufactured according to danish gas regulations part B-4 and approved by DGP under no. TV 81.

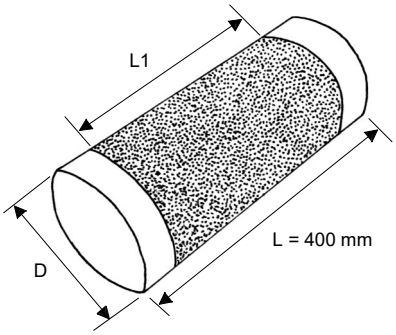

Gas pipe DN	Wall Duct D x L	L1	ID	Insulator x 2 type	Casing end seal x 1 type	Item no.
1”	110 x 500	400	100	PA 1 - 25	KG 1” - 4”	211-2490
1 1/4”	110 x 500	400	100	PA 1,25 - 11	KG 1 1/2” - 4”	211-2491
1 1/2”	110 x 500	400	100	(PA 1,5 - 14,5)	DU 1 1/2” - 4”	211-2492
2”	110 x 500	400	100	PA 2 - 16	DU 2” - 4”	211-2493
2 1/2”	160 x 500	400	139	RANGER II S-28 (4 seg)	KG 2 1/2”´- 6”	211-2494
3”	160 x 500	400	139	PA 3 - 16	DU 3” - 6”	211-2495
4”	180 x 500	400	153	PA 4 - 16	KG 100 - 180	211-2496
5”	250 x 500	400	217	AZ 1 - 25 (4 seg)	KT 250/300-50	211-24965
6”	250 x 500	400	217	PA 6 - 16	KT 250/300-50	211-2497

Gas Regulations; Section B-4 of the Pipeline installation

3.6 Lead-in of gas pipe in buildings

3.6.1 In generel

3.6.1.1 Installing of a gas pipe into a building must be carried out with an lead-in above ground, as the lead-in is equipped with a main ball valve to interrupt the building's gas supply in the event of a line break or a fire in the building.

3.6.1.2 Pipes made of PE in the ground with a diameter of over 63 mm must be installed with a transition piece for steel pipes at a distance of at least 2 meters from the building.

3.6.1.3 For pipes of PE in the ground with diameter less than or equal to 63 mm, can the gas line be made in accordance with pkt. 3.2.3.2 or pkt. 3.2.3.4 in Gas Regulations part A.

3.6.2 *Lead-in of gas pipe above ground*

Installing a gas pipe above ground must, in principle, be carried out according to Fig. 12

3.6.3 *Lead-in of underground gas pipe*

3.6.3.1 Installing a gas pipe underground may only be carried out when lead-in above ground would be inappropriate in terms of safety or practically difficulty due to lead-in from street areas.

3.6.3.2 Installing below ground in a building without a basement must, in principle, be carried out in accordance with Fig. 13, or in another way approved by DGP. The pit into which the gas line is lead-in must be designed as e.g. shown in the figure. The concrete box must be ventilated, cast or filled with sand.

3.6.4 *Wall Duct*

3.6.4.1 Wall penetration of pipes below ground must be carried out with casing pipes, so that the penetration is waterproof and gas-tight, for example as indicated in Fig. 14.

3.6.4.2 Wall penetration of pipes above ground must be carried out with casing pipes, so that the space between the casing pipe and the gas pipe is protected against seepage of water, for example as indicated in Fig. 15.

1. Gas pipe
2. Cobalch Flange Insulation
3. RMA Ball Valve
4. Blow off Valve
5. Cobalch Wall Duct in steel

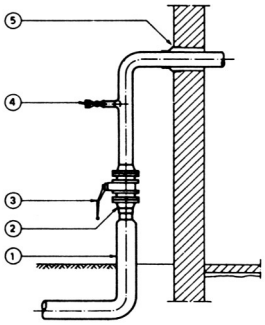

Fig. 12

1. RMA Ball Valve
2. Gas pipe
3. Pit
4. Concrete box
5. Blow off Valve
6. Cobalch Wall Duct in steel
7. Cobalch Flange Insulation

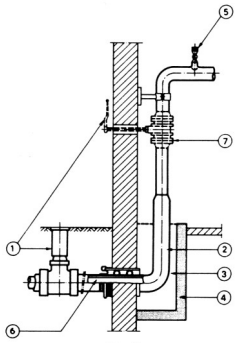

Fig. 13

1. Gas pipe
2. Cobalch Casing end Seal
3. Cobalch Insulators
4. Cobalch Wall Duct in steel

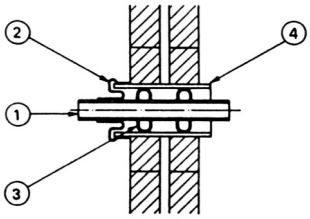

Fig. 14

1. Gas pipe
2. Sealant on both sides of the wall
3. Cobalch Wall Duct in steel
4. Cobalch Casing end Seal

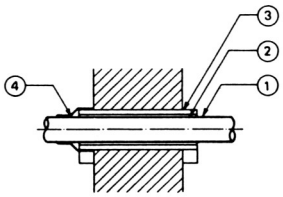

Fig. 15

DG TEKNISK VURDERING 04.11.86 TV 65

Identifikation

Emne	Murgennemføring
Fabrikat	DSI
Typebetegnelse	Type DN 25-32-40-50-65-80-100-150-200-250-300
Indsender	COBALCH ApS Bregnerødvej 132 DK-3460 Birkerød
Anvendelse	Murgennemføring til brug ved indførelse af gas i bygning under terræn
Materiale	St. 37
Vurderingsgrundlag	Det fremsendte prøveemne Specifikation over murgennemføring
Bemærkninger	Udført i.h.t. Gasreglementets afsnit 3-4
Konklusion	Kan anvendes til formålet

DG TEKNISK VURDERING 04.11.86 TV 81

Identifikation

Emne	Murgennemføring
Fabrikat	DSI
Typebetegnelse	Type DN 1"-1¼"-1½"-2"-2½"-3"-4"-6"
Indsender	COBALCH ApS Bregnerødvej 132 DK-3460 Birkerød
Anvendelse	Murgennemføring til brug ved indførelse af gas i bygning over terræn
Materiale	Sandbelagt PEH
Vurderingsgrundlag	Det fremsendte prøveemne
Bemærkninger	Udført i.h.t. Gasreglementets afsnit 3-4. Se evt. TV 65
Konklusion	Kan anvendes til formålet

Technical modifications reserved

Cobalch ApS ● Hejreskovvej 24 ● DK-3490 Kvistgård ● Denmark ● Tel.: +45 4582 0533
CVR nr. DK70614316 ● cobalch@cobalch.com ● www.cobalch.com